19.3 Exercises - Discharging a capacitor

1. A capacitor, a battery of electromotive force (e.m.f.) 12V, a resistor R and a two-way switch are connected in the circuit shown in Fig.

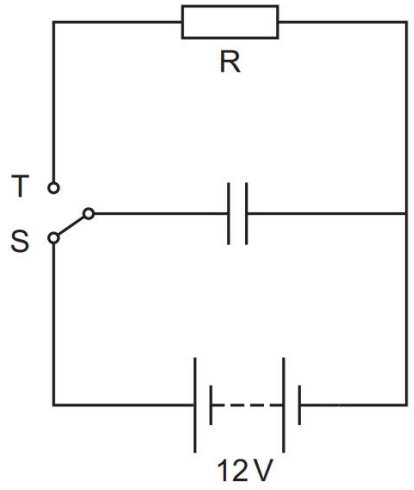

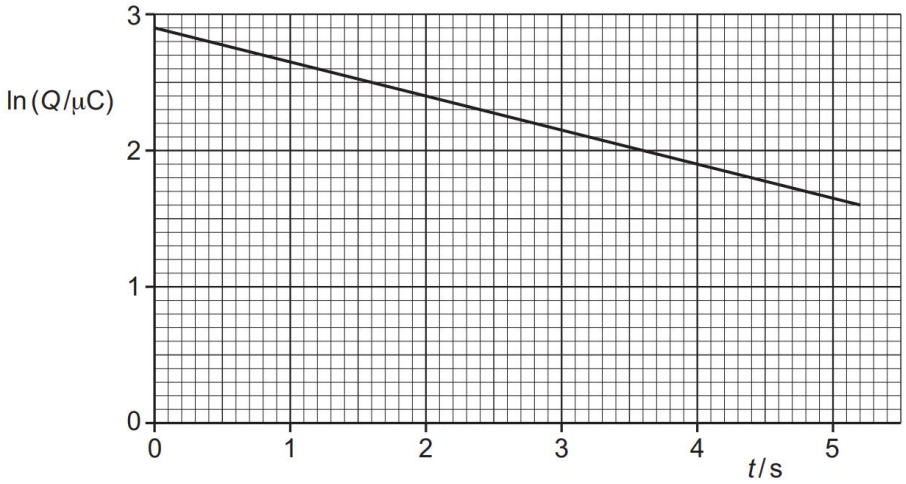

The switch is initially in position S. When the capacitor is fully charged, the switch is moved to position T so that the capacitor discharges. At time t after the switch is moved the charge on the capacitor is Q.

The variation with t of ln(Q/μC) is shown in Fig.

a. What is the capacitance of the capacitor

capacitance = ... μF [3]

b. Determine the resistance of R.

resistance = ... Ω [3]

c. Calculate the energy stored in the capacitor at time t = 0.

energy = ... J [2]

d. A second identical resistor is now connected in parallel with R.

The switch is initially in position S. When the capacitor is fully charged, the switch is moved to position T so that the capacitor discharges. At time t after the switch is moved the charge on the capacitor is Q.

On Fig., sketch a line to show the variation of ln(Q/μC) with t between time t = 0 and time t = 5.0s. [2]

2. A capacitor of capacitance C and a resistor of resistance R are connected as shown in Fig.

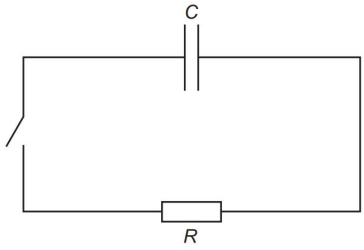

Fig. 6.1

Initially, the capacitor is charged and the switch is open.
The switch is closed at time t = 0.
Fig. 6.2 and Fig. 6.3 show, respectively, the variations with t of the charge Q on the capacitor and the potential difference (p.d.) V across the resistor.

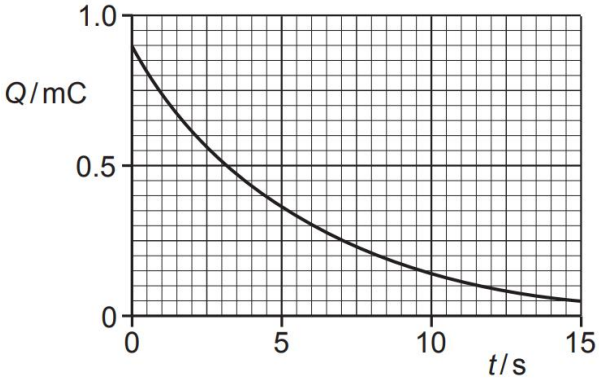

Fig. 6.2

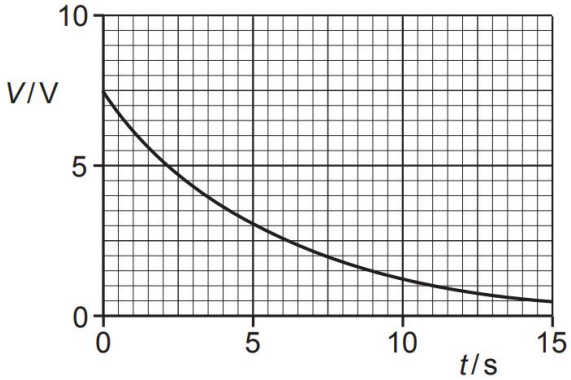

Fig. 6.3

a. Explain the shape of the line in Fig. 6.3 representing the variation of V with t.

.....

.....

..... [3]

b. Use Fig. 6.2 to show that the time constant of the circuit in Fig. 6.1 is 5.5s. [3]

c. Use Fig. 6.2, Fig. 6.3 and the information in (b) to determine:

i. capacitance C, in μF

C = ... μF [2]

ii. resistance R, in kΩ.

R = ... kΩ [2]